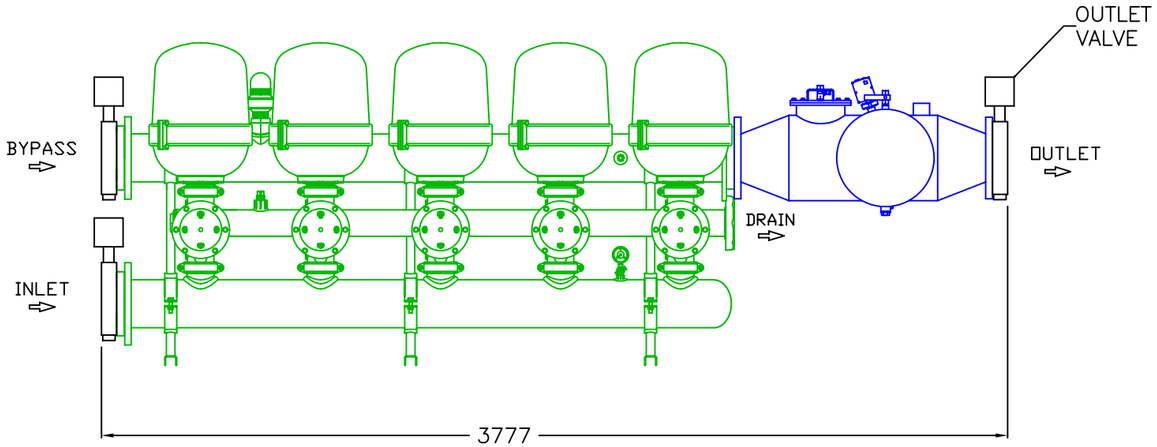

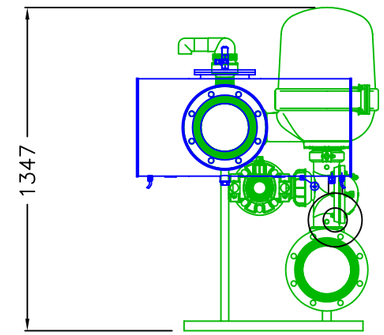

INTERFACE SCHEMATIC

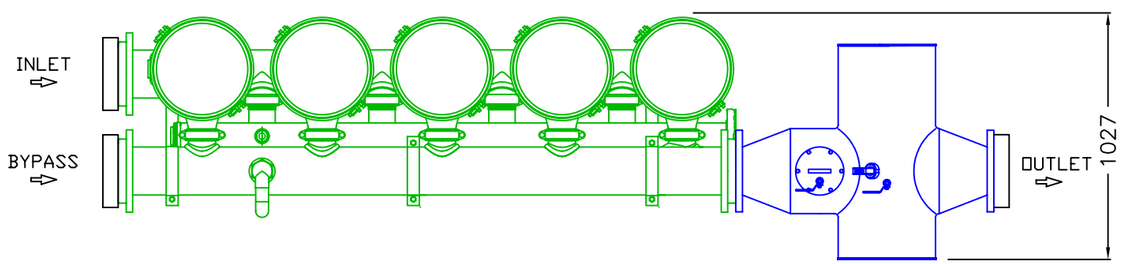

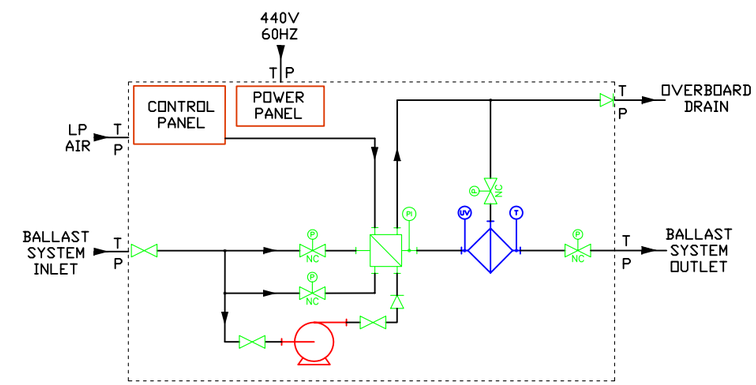

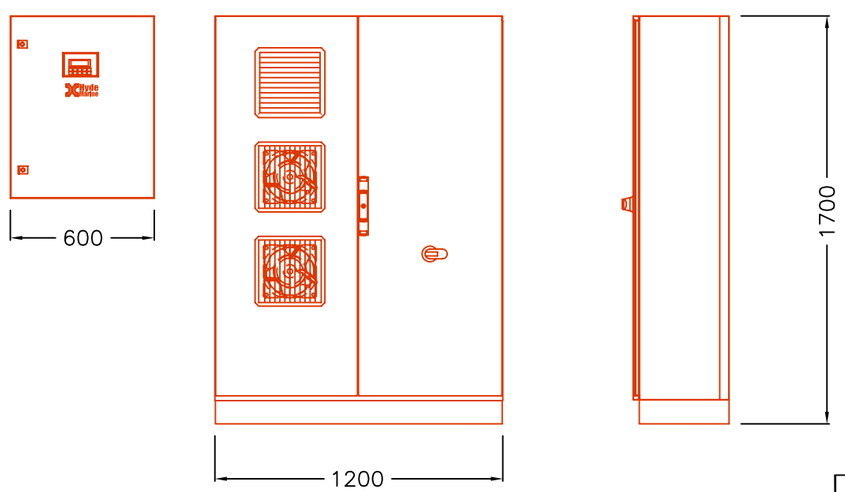

KEY

- BOOSTER PUMP
- BACKFLUSHING FILTER
- UV CHAMBER
- PNEUMATICALLY ACTUATED VALVE
- MANUAL VALVE
- CHECK VALVE

DRAWING FOR REFERENCE ONLY – SPECIFICATIONS SUBJECT TO CHANGE WITHOUT NOTICE

THIS DRAWING IS THE PROPERTY OF HYDE MARINE INC.

THIS DRAWING IS LOANED WITHOUT FURTHER CONSIDERATION THAN THE AGREEMENT AND CONDITION THAT IT IS NOT TO BE REPRODUCED, COPIED, OR OTHERWISE DISPOSED OF, DIRECTLY OR INDIRECTLY, AND IS NOT TO BE USED IN WHOLE OR IN PART TO ASSIST IN MAKING AND TO FURNISH ANY ARTICLE OR ARTICLES FROM THE DRAWINGS, PARTS, APPARATUS, OR PARTS THEREOF.

THE ACCEPTANCE OF THIS DRAWING WILL BE CONSTRUED AS AN ACCEPTANCE OF THE STIPULATIONS CONTAINED IN THE PRECEDING PARAGRAPH IN AND TO THE DRAWING OF HYDE MARINE INC.

DATE	SYM	REVISION RECORD	DR.	CK.

FINISH SYMBOLS	
16	POLISH
32	GRIND
63	FINE-MACH.
125	SEMI-FINE
250	MEDIUM

BREAK ALL SHARP EDGES

mat'l:

weight:

TOLERANCES (except as noted)

decimal: .XXX ±.005" .XX ±.010"

fractional: ±1/64"

angular: ±1/2 deg.

fab. dimensions: ± 1/16"

mach. dimensions: ± 1/64"

Hyde Marine

28045 RANNEY PKWY., UNIT G, CLEVELAND, OH 44145-1144
PHONE: (440) 871-8000 FAX: (440) 871-8104

title: "GUARDIAN" BALLAST TREATMENT SYSTEM

drawn by | scale: NTS | disk no.

approved | date | sheet 1 of 1

drawing number: GUARD200A | rev. A

XXXX-XX

USED ON